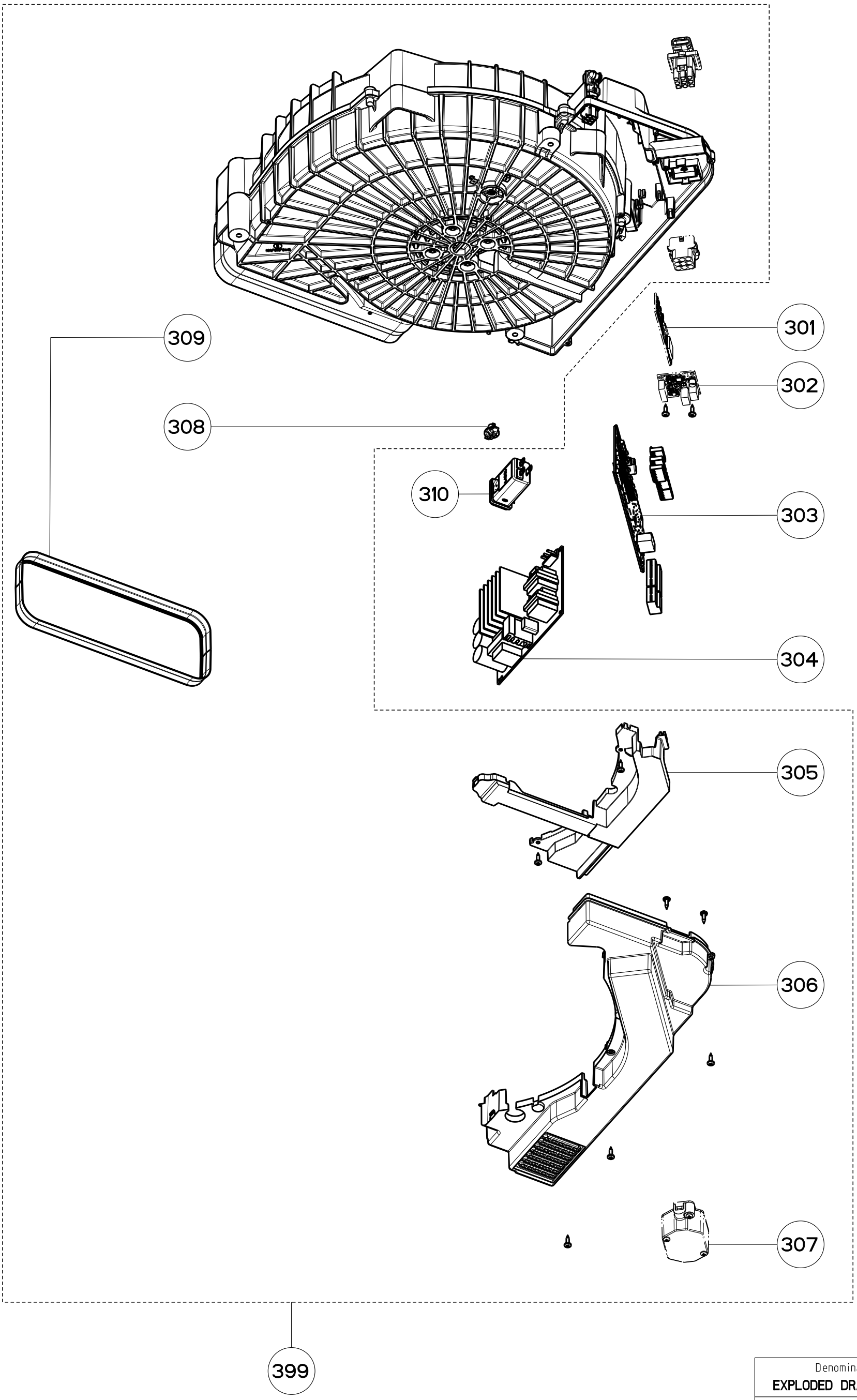

Denomination **EXPLODED DRAWING M24**	
Rif. 300	
Approval date **09-Jun-2025**	
Doc. status **Released**	
Drawing N. D48_721	Rev 01