Belfast

IM

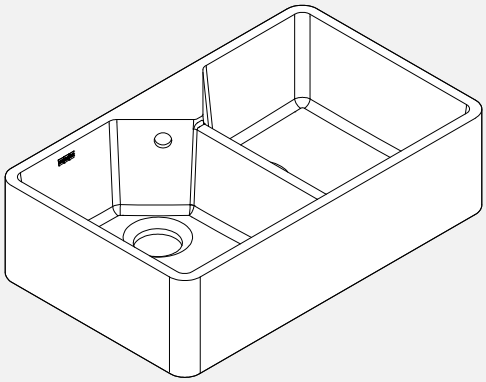

BFK 720-36-36

EN Installation manual
DE Installationsanleitung
FR Manuel d'installation
NL Installatiehandleiding
IT Manuale di installazione
ES Manual de instalación
PT Manual de instalação
EL Εγχειρίδιο εγκατάστασης
DA Installationsvejledning
NO Installasjonsmanual
SV Installationsanvisning
FI Asennusohje
LT Montavimo vadovas
LV Uzstādīšanas rokasgrāmata
ET Paigaldusjuhend
CS Montážní návod
PL Instrukcja montażu
SK Návod na inštaláciu
SL Priročnik za namestitev
SR Priručnik za instalaciju
HU Telepítési kézikönyv
HR Priručnik za instalaciju
RO Manual de instalare
BG Ръководство за монтаж
UK Посібник зі встановлення
TR Kurulum kılavuzu
RU Руководство по установке
ZH 安装手册
TH คู่มือการติดตั้ง
AR دليل التركيب

FRANKE



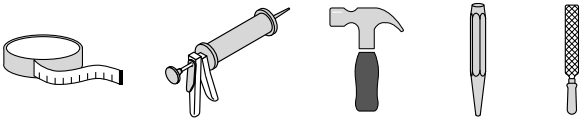

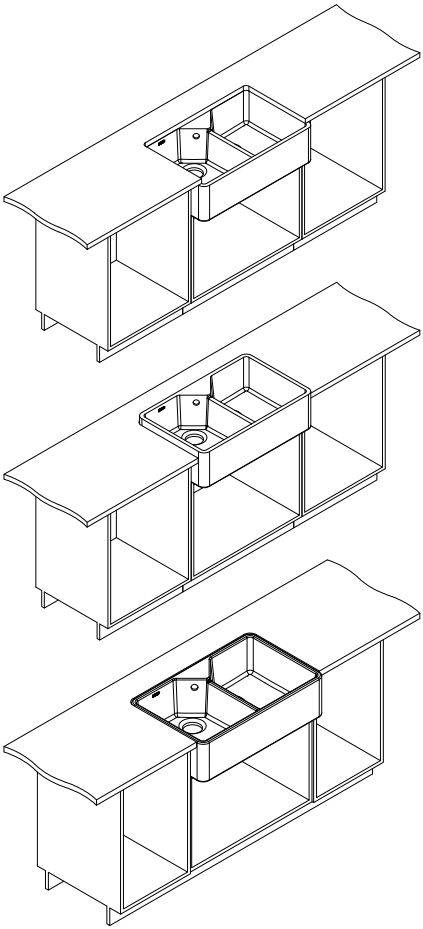

Undermount

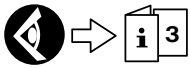

Topmount

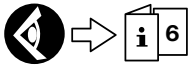

Flushmount

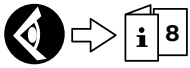

1

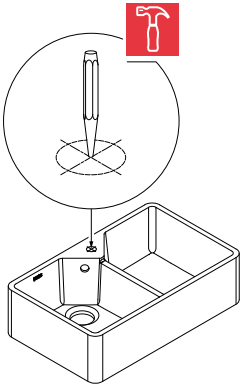

2

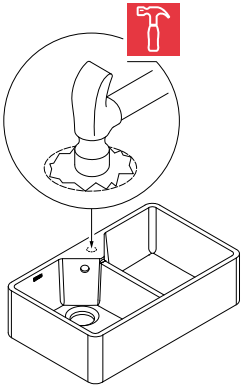

3

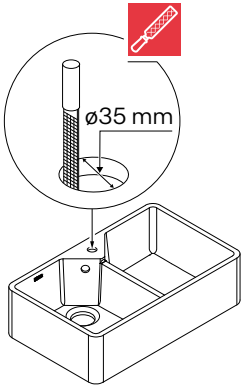

1

Undermount

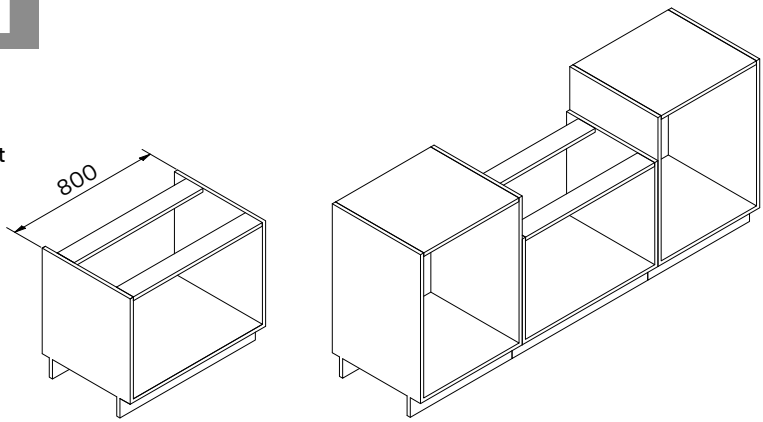

2 A B

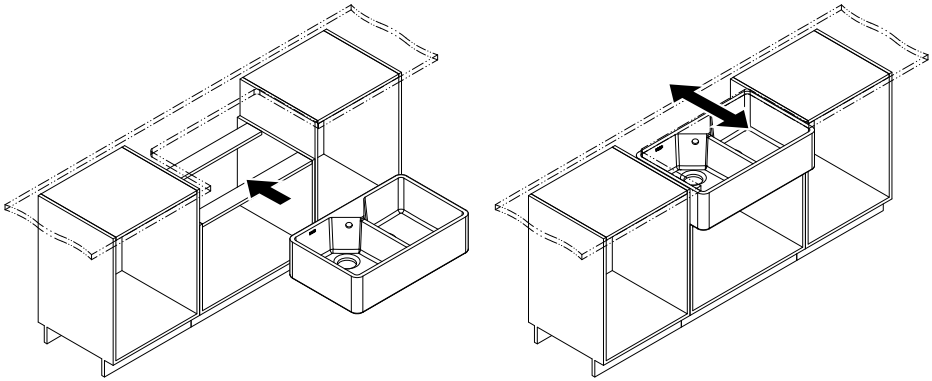

A

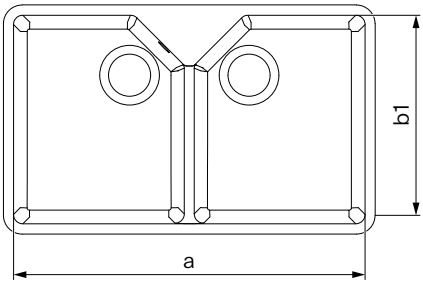

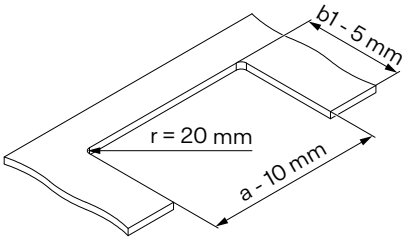

A

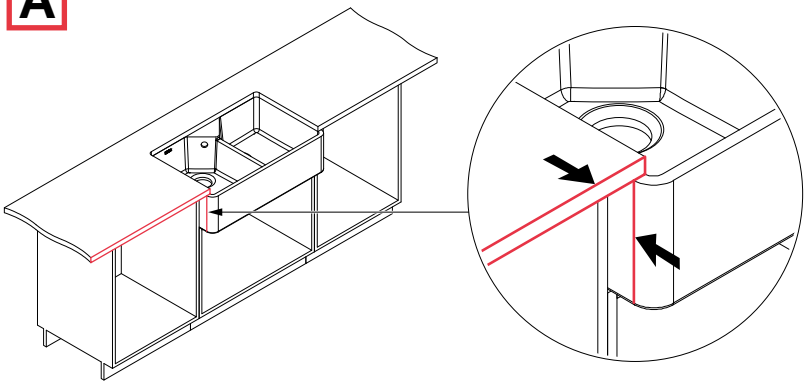

B

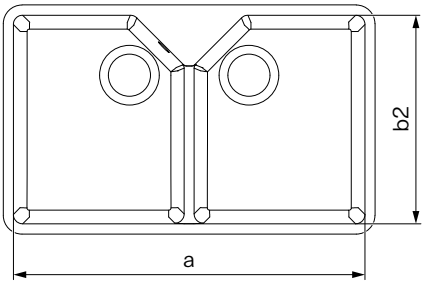

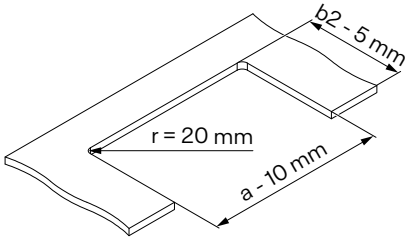

B

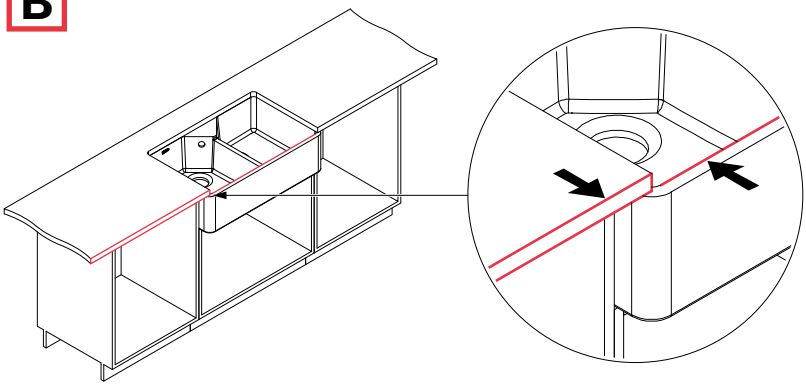

3

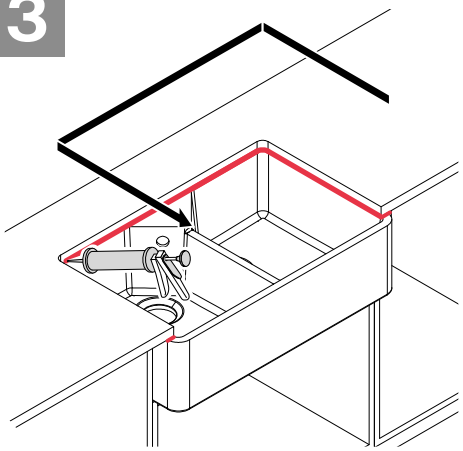

4

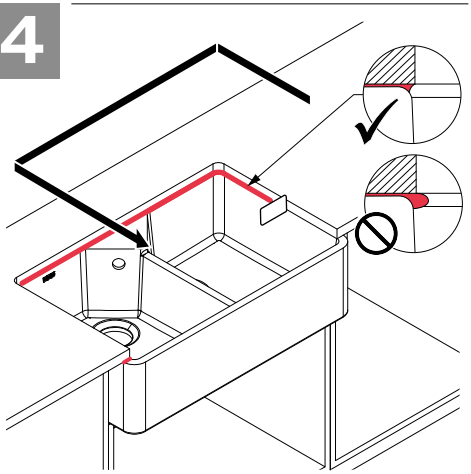

5

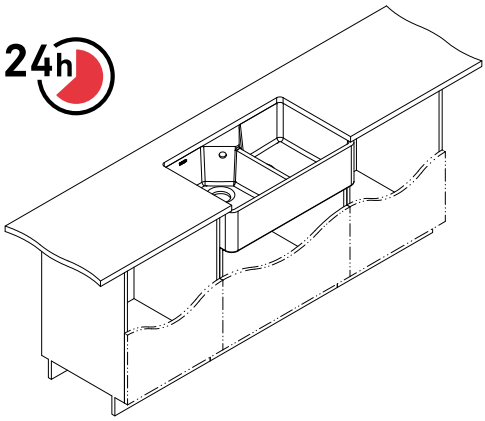

1

Topmount

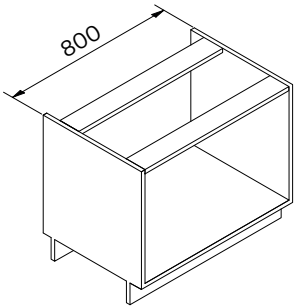

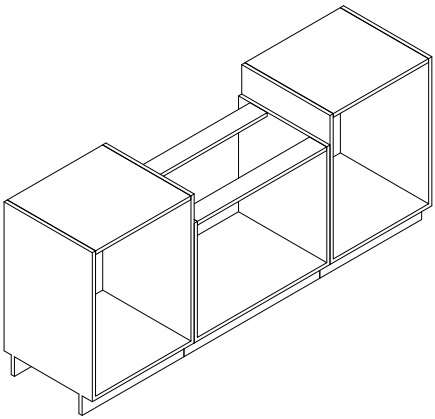

2

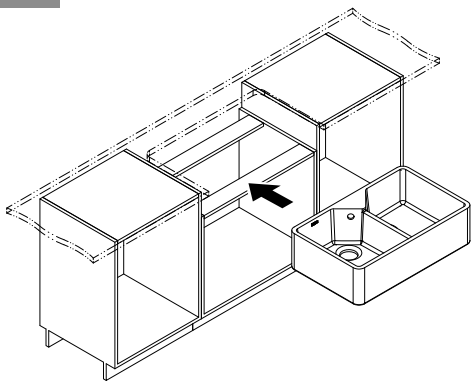

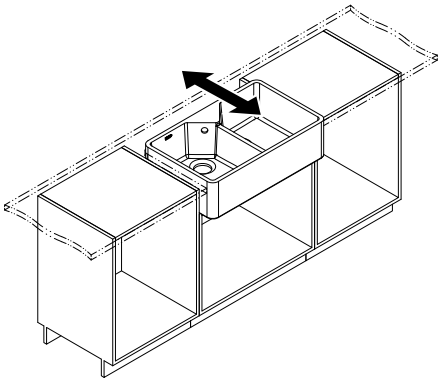

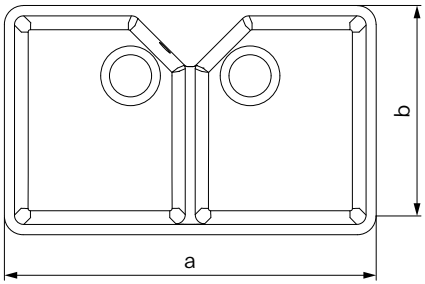

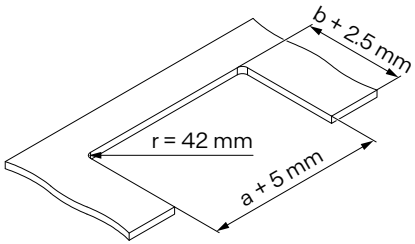

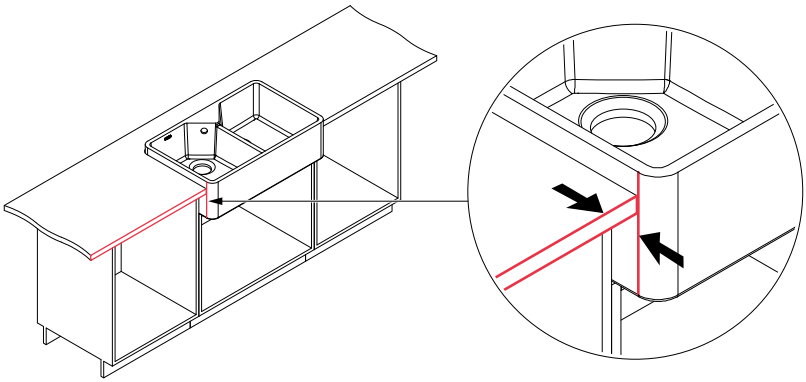

3

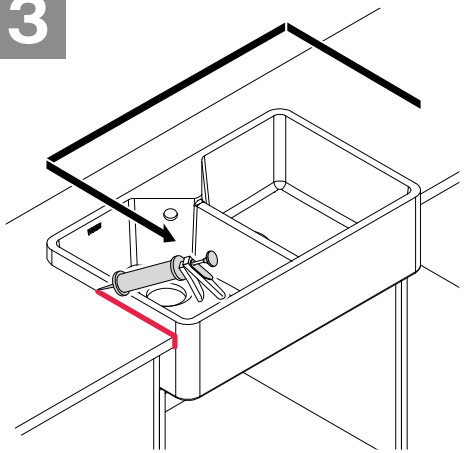

4

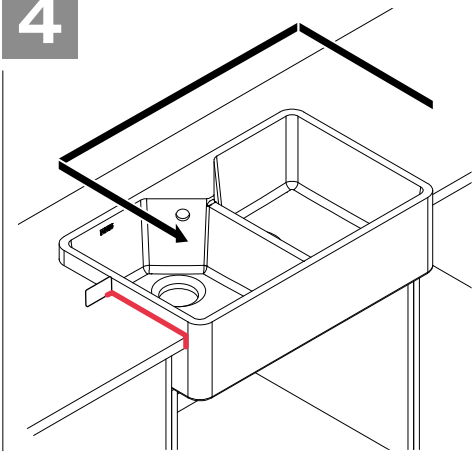

5

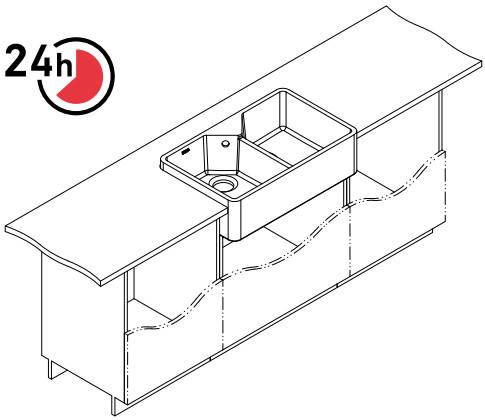

1

Flushmount

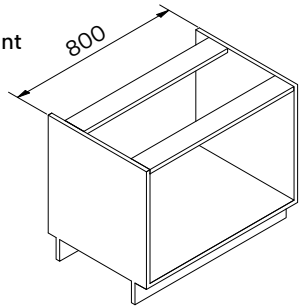

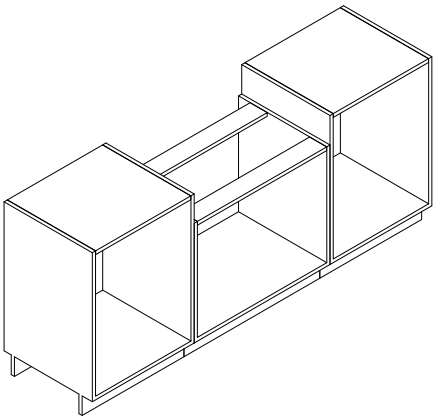

2

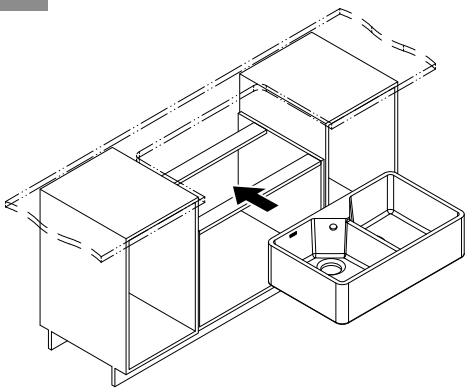

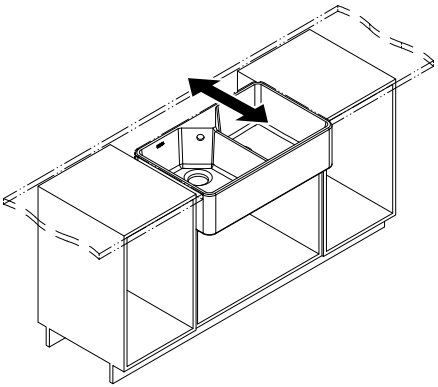

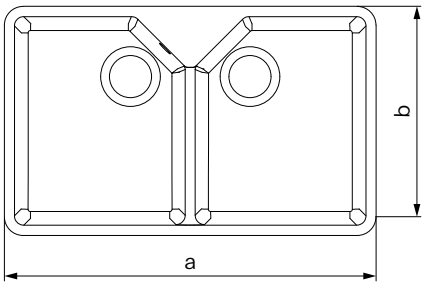

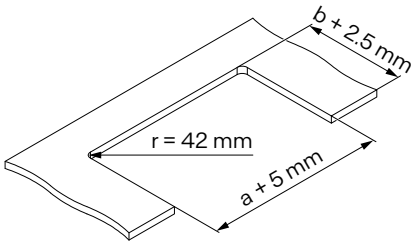

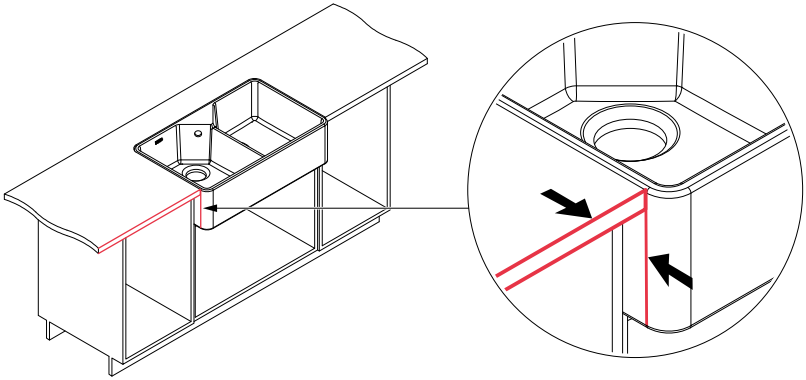

3

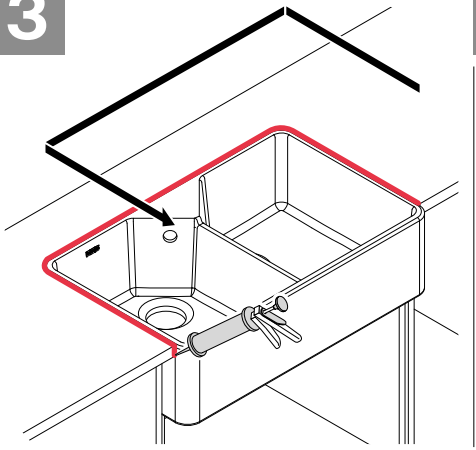

4

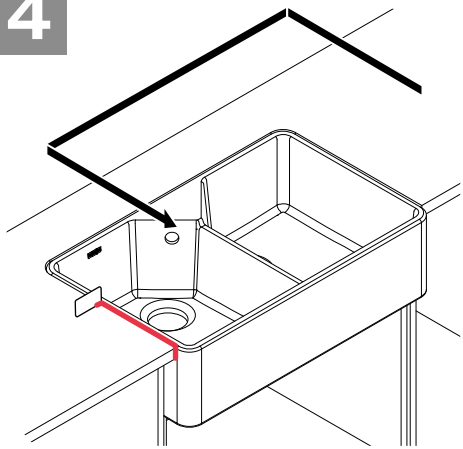

5

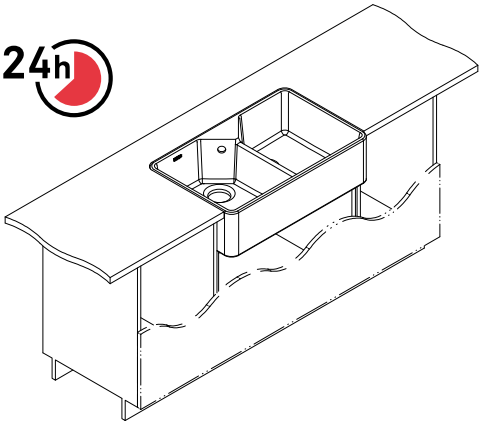







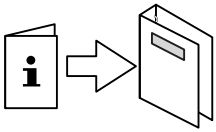

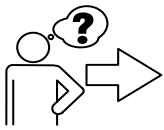

franke.com

Argentina
Industrias Spar
San Luis S.A.
Buenos Aires 1008
Phone +54 11 4311 7655

Australia
Franke Australia
Dandenong South VIC 3175
Phone: +61 3 9700 9100

Belgium
Franke N.V.
9400 Ninove
Phone +32 54 310 111

Brazil
Franke Sistemas de Cozinhas Ltda
89.219-600 Joinville-SC
Phone 0800-4773000

Canada
Franke Kindred Canada Ltd.
Midland, ON L4R 4K9
Phone +1 866 687 7465

China
Franke (China) Kitchen Systems Co., Ltd.
Heshan, Guangdong, 529700
Phone 400 882 9898

Czech Republic
Franke s.r.o.
190 00 Praha 9
Phone +420 281 090 445

Denmark
Franke KS Denmark
8520 Lystrup
Phone +45 8624 9024

Finland
Franke Finland Oy
76850 Naarajärvi
Phone +358 15 341 11

France
Franke France S.A.S.
60230 Chambly
Phone +33 130 289 400

Germany
Franke GmbH
79713 Bad Säckingen
Phone +49 7761 52 199

Greece
Franke Hellas S.A.
19003 Markopoulo Attikis (Athens)
Phone +30 22991 500 00

Hong Kong SAR
Franke Asia Hong Kong
Quarry Bay
Phone +852 3184 1900

India
Franke Faber India Private Limited
Pune 412208
Phone 1800 209 3484

Italy
Franke S.p.A.
37019 Peschiera del Garda
Toll-free number
800 359 359

Kazakhstan
Franke Kazakhstan Ltd.
040918 Almaty City
Phone +7 727 297 3812

New Zealand
Franke Australia
Dandenong South VIC 3175
Phone: +64 9 964 0400

Norway
Franke KS Norway
8520 Lystrup, Denmark
Phone +47 35 566 450

Poland
Franke Polska Sp. z o.o.
05-090 Raszyn
Phone +48 22 711 6700

Portugal
Franke Portugal S.A.
2735-531 Cacém
Phone +351 21 426 9670

Romania
Franke Romania SRL
Pantelimon 077145
Phone +40 21 350 1550

Russia
Franke Russia GmbH
248033 Kaluga
Phone +7 800 555 1255

Singapore
Franke Singapore Pte Ltd
6 Raffles Boulevard
#02-274/274A Marina Square
Singapore 039594

Slovak Republic
Franke Slovakia s.r.o.
013 24 Strečno
Phone +420 281 090 445

South Africa
Franke South Africa
Durban 4052
Phone +27 31 450 6300

Spain
Franke España S.A.U.
08174 Sant Cugat del Vallès
Phone +34 934 456 768

Sweden
Franke Futurum AB
930 47 Byske
Phone +46 912 405 00

Switzerland
Franke Küchentechnik AG
4663 Aarburg
Phone +41 800 583 243

Thailand
Franke (Thailand) Co., Ltd.
Bangkok 10110
Phone +66 2 013 7900

The Netherlands
Franke Nederland BV
5611 ZX Eindhoven
Phone +31 85 0261 15 11

Turkey
Franke Mutfak ve Banyo Sistemleri Sanayi ve Ticaret A.S.
41480 Gebze Kocaeli/ Turkey
Phone +90 262 644 6595

Ukraine
Franke Ukraina LLC
01042 Kyiv
Phone 0 800 301 801

United Kingdom
Franke UK Ltd.
Manchester M22 5WB
Phone +44 161 436 6280

USA
Franke Home Solutions North America, LLC
Smyrna, TN 37167
Phone 1 800 626 5771

© Franke Technology and Trademark Ltd., Switzerland | 2026-04-22 | V03 | 993.0730.068 | ID: 20268988

franke.com

993.0730.068

FRANKE